BACHARACH®

Bodyguard® 4

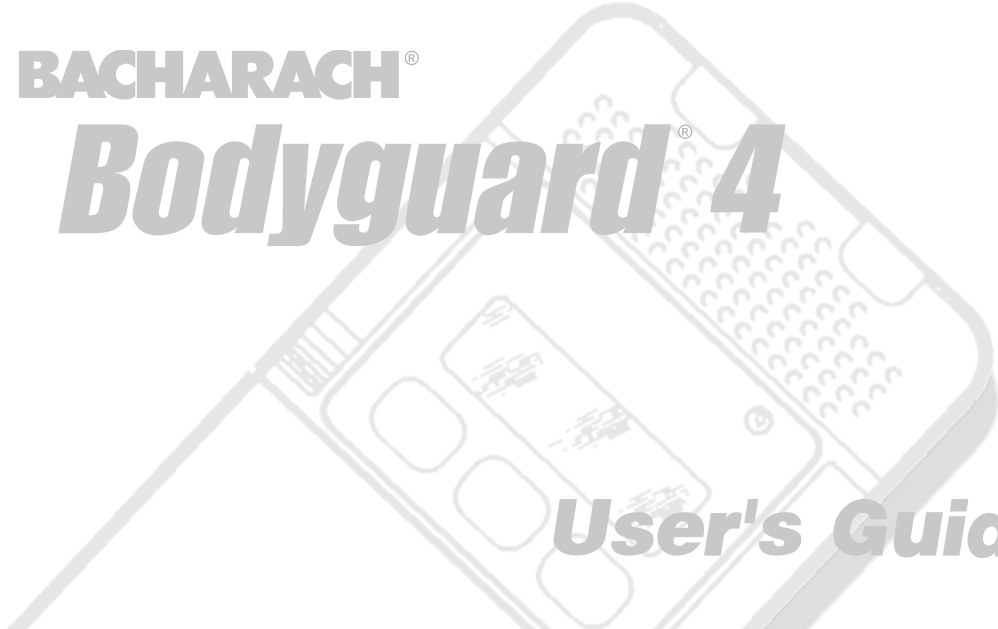

User's Guide

Bacharach Bodyguard 4
User's Guide

Printed in the U.S.A.

Bacharach, Inc.
625 Alpha Drive
Pittsburgh, PA 15238-2878

Phone: 1-800-736-4666
FAX: 1-412-963-2606
E-mail: help@bacharach-inc.com
Web: www.bacharach-inc.com

Welcome

Thank you for your purchase of the Bacharach Bodyguard 4. Bacharach has designed this product with your convenience and safety in mind.

The Bodyguard is designed for your personal safety in accordance with the requirements of governmental agencies. For your protection, the Bodyguard detects and measures the concentrations of oxygen, combustibles, and several toxic gases.

Your Bodyguard has been designed and manufactured to be:

- ❑ easy to use
- ❑ durable
- ❑ reliable
- ❑ compact

If you have any questions or problems, please call 1-800-736-4666, send e-mail to help@bacharach-inc.com, or write to:

Bacharach, Inc.
625 Alpha Drive
Pittsburgh, PA 15238-2878
Attn: Customer Relations

Thank you for choosing Bacharach!

Contents

Cautions

For safety reasons, the Bodyguard must be operated, calibrated, and serviced by qualified personnel. Before using the Bodyguard, please read and understand this User's Guide and take note of the following precautionary information:

- The Bodyguard's gas sensitivity should be tested before each use.
- Do not expose the Bodyguard to Aerosol sprays, polishes, waxes, or lubricants containing silicones or lead. These compounds will desensitize or "poison" the combustibles sensor. When poisons cannot be eliminated, it is essential to test the sensor frequently to ensure safe and accurate operation of the Bodyguard. If the sensor becomes poisoned, it must be replaced.
- Replace the Alkaline batteries or charge the NiMH battery pack only in non-hazardous areas.

- The Bodyguard is not intrinsically safe when it is attached to a battery charger that is plugged into a wall socket.
- Use only Bacharach approved chargers.
- If the gases used in the calibration procedure do not match expected concentrations, the Bodyguard will show incorrect gas readings. To ensure your safety, only use Bacharach calibration cylinders.
- Use only genuine Bacharach replacement parts. Substitution of components may impair the instrument's intrinsic safety and void the warranty.

Chapter 1: Getting Started

This chapter details the contents of the basic Bodyguard package, and introduces you to the instrument's standard features.

What Gases are Detected?

The gases detected by your Bodyguard is dependent upon the type of sensors that are installed. To determine what particular sensors were installed in your instrument at the time of manufacture, please refer to Chapter 9: *Bodyguard Part Number Identification*.

Unpacking the Bodyguard

As you unpack the box containing a standard Bodyguard, you will find the items shown in the illustration to the right. If you ordered the Bodyguard in either a Confined Space Kit, or a Hazardous Gas Detection Kit, please refer to *Chapter 8: Accessories* for a list of the items contained in these kits.

Standard Bodyguard Components

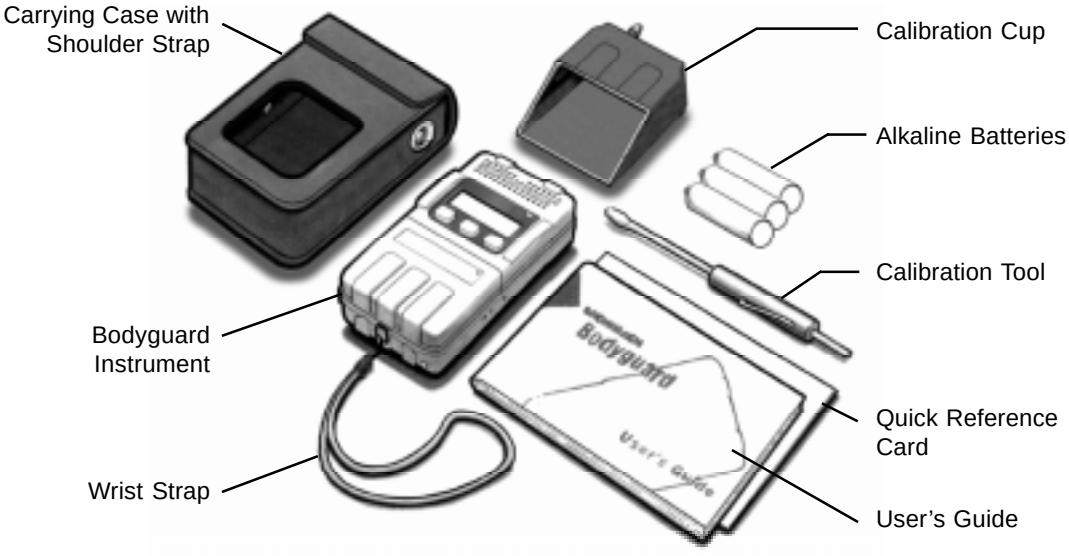

Introducing the Bodyguard

The following illustrations show the major features of the Bodyguard.

Top Components

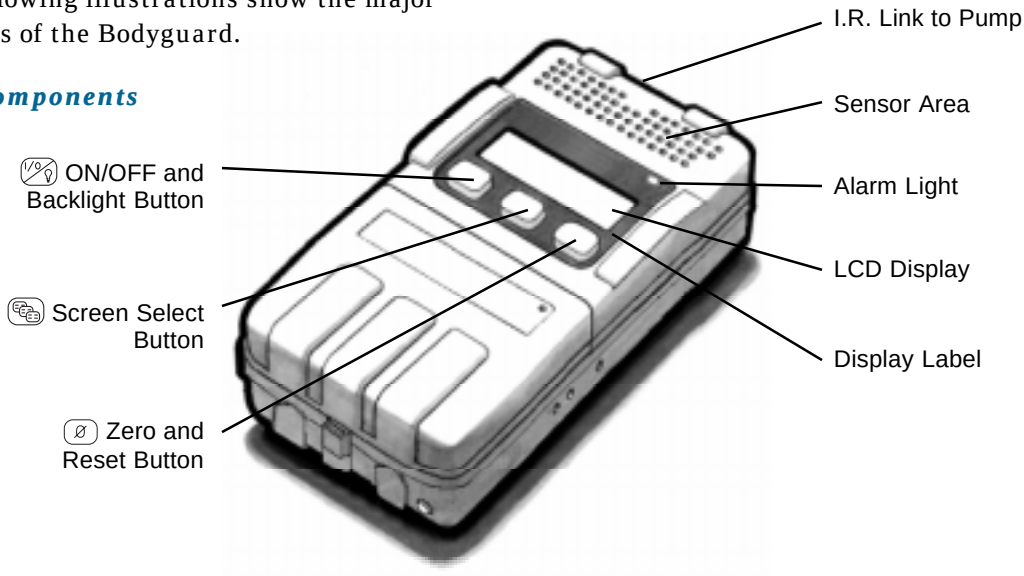

Bottom Components

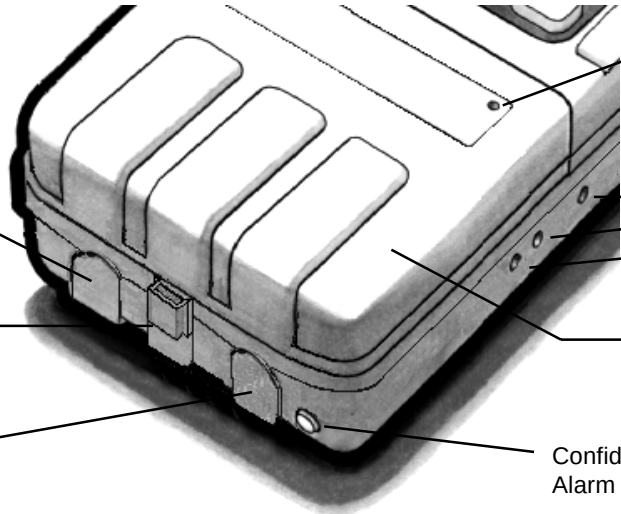

Back Components

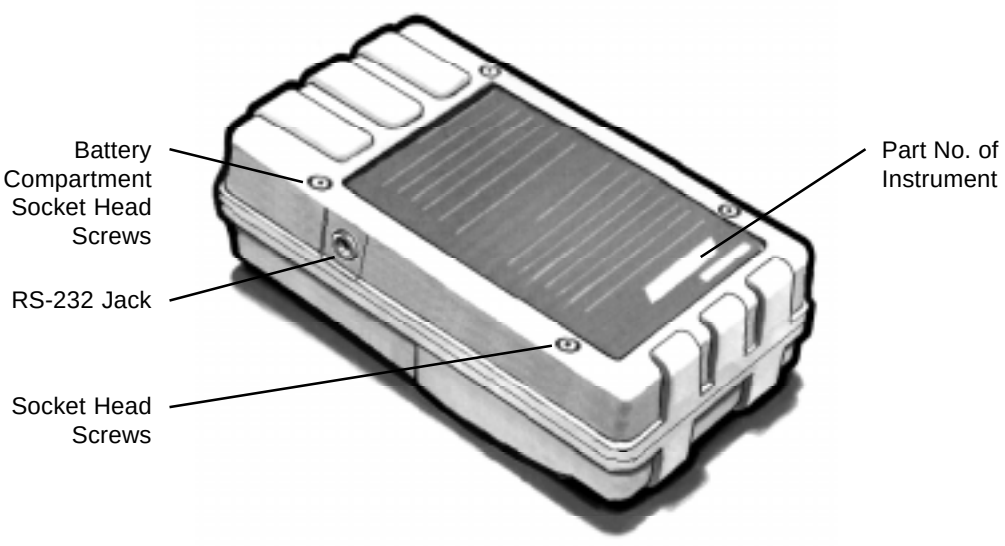

Chapter 2: Using the Bodyguard

Wearing the Bodyguard

Your Bodyguard has been supplied with a leather carrying case, which has been designed so that you can either attach the Bodyguard to your belt, carry the instrument over your shoulder, or by using the optional waist strap secure the instrument close to your body.

The case also accommodates the addition of the optional battery-operated sampling pump, along with its associated probe and hose.

Wearing the Bodyguard

Turning ON the Bodyguard

If not already done, install three “AA” Alkaline batteries or charge the rechargeable battery pack per *Chapter 5*.

To turn ON the Bodyguard, momentarily press the button on the front of the instrument. This will start the instrument’s warm-up sequence

When the instrument is turned on, it will beep once and you will see the following series of displays during warm-up:

. . . Software Version No.

```
BACHARACH
        XXXXXXX
```

. . . Currently selected mode of operation (BASIC, SUPERVISORY, or HYGINE)

```
o WARM-UP
  BASIC
```

. . . Battery voltage for Alkaline cells, or remaining battery capacity for a rechargeable battery pack.

```
o WARM-UP
  4.5V
```

```
o WARM-UP
  100%
```

. . . Date of last calibration.

```
o WARM-UP
CAL 06/11/97
```

. . . Remaining logging hours (Supervisory and Hygiene modes only).

```
 o WARM-UP
LOG TIME 135
```

. . . Checking sensors, followed by what sensors are installed. If a sensor problem is detected, a warning message will be displayed. Refer to "Chapter 7: Alarm / Warning Messages."

```
CHECKING
 SENSORS
```

```
 O2        LEL
 CO        H2S
```

Note: Unless specified otherwise, the remaining displays in this User's Guide depict a four-gas instrument with O_2, LEL, CO, and H_2S sensors installed.

. . . Normal Gas Display – after warm-up is complete, the instrument switches to its Normal Gas Display that shows the current detected gas levels. If one or both toxic sensor are not installed, their corresponding displays will be blank.

```
O2                LEL
 20.9              0
    0              0
TOXIC1            TOXIC2
```

Once the instrument is turned on and successfully completes its warm-up sequence, a confidence light at the bottom of

the instrument flashes once every 10 seconds to indicate that the instrument is operational.

Turning OFF the Bodyguard

To turn OFF the Bodyguard, press and hold the button on the front of the instrument for approximately 3–4 seconds; then release. The time delay prevents the instrument from being accidentally turned off.

During this time the backlight comes on and you will see the display:

```
POWER OFF
    3
```

After the display counts down (3-2-1), the display goes blank.

Battery Low and Depleted Warnings

The Bodyguard provides audible and visual warnings of when approximately 1 hour of battery life remains.

When a battery-low condition occurs, you will hear the instrument beep once-per-second and see the display:

```
BATTERY
 LOW
```

Press the button to acknowledge the battery-low condition; after which, you can continue using the instrument until the battery becomes depleted.

When the battery becomes depleted, the instrument provides both audible and visual warnings of this condition for 10 seconds

before the instrument automatically shuts itself off.

10 seconds before shut-off occurs, you will hear the instrument beep twice-per-second and see the display:

```
BATTERY
 DEPLETED
```

Using the Backlight

While the instrument is on, pressing the button for *less* than 1 second toggles the backlight ON and OFF.

If the backlight is not manually toggled OFF, it will automatically turn off in 30 seconds.

Zeroing the Bodyguard in Fresh Air

To ensure accurate gas readings, we recommend that you zero the instrument in fresh air before each use. This is done to compensate for sensor aging and environmental factors such as temperature, humidity, and altitude.

1. Turn ON the Bodyguard and allow the readings in the Normal Gas Display to stabilize before proceeding.

2. Press and hold down the button for 3 seconds.

While the Ø button is being held down, the following display counts down (3-2-1):

```
HOLD TO
 ZERO     3
```

At the end of 3 seconds the following message is displayed for approximately 5 seconds:

```
ZEROING
 SENSORS
```

After the sensors have zeroed, the instrument returns to its Normal Gas Display.

Note: If the Ø button is released before the 3-second countdown is complete, the instrument is not zeroed and returns to its Normal Gas Display.

Note: If the instrument beeps twice and displays a WARNING message during zeroing, refer to "Chapter 7: Alarm / Warning Messages."

Understanding the Display

The Bodyguard is capable of showing up to seven displays that provide information on the gases being monitored and the operating condition of the instrument. The number of displays that are available for viewing is determined by whether the instrument is set up for Basic, Supervisory, or

Hygiene operation. Refer to *Chapter3: Turning On the Data Logging, Min/Max, TWA, and STEL Functions*.

The button is used to sequence through the displays in the following order.

☞ *Tip: When a specific display is chosen for viewing, it is normally shown for only several seconds before the instrument automatically returns to the Normal Gas Display (the min/max display is shown for 12 seconds, while all other displays are shown for 6 seconds). If you wish, however, to view a display for an indefinite period of time, press and* ***hold*** *the button at the time of selection.*

Normal Gas Display (All modes)

O2	LEL
20.9	0
0	0
TOXIC1	TOXIC2

Shows the current detected values of oxygen, combustibles, and up to two toxic gases. The number of gases that are displayed, and the type of toxic gases being monitored, depend on how your Bodyguard was configured at the factory. Refer to *Chapter 9: Bodyguard Part Number Identification*.

The Normal Gas Display is the default, and is the one that is shown after the Bodyguard is turned on. It is also the display

that the instrument automatically returns to after viewing any of the other displays.

The Bodyguard is configured to display oxygen levels in %O_2 and toxic gas levels in parts-per-million (ppm). The combustibles value, however, can be set up to be displayed in either %LEL or %CH4. Refer to *Chapter 3: Selecting Combustibles Display Units of Measure.*

If a gas value exceeds its preset alarm level, the gas value will flash.

If a gas value exceeds the full scale range of its sensor, the gas value is replaced by "+ + + +".

If a sensor becomes defective, its associated gas value is replaced by "– – – –".

Min / Max Display (Supervisory and Hygiene Modes)

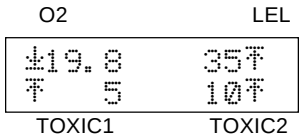

Shows the minimum and maximum values of oxygen that the Bodyguard has encountered. The O2 reading alternates between a down arrow (⊥) next to the O2 reading designating the minimum value while an up arrow (⊤) designates the maximum value.

Also displayed are the maximum readings (⊤) for all other gases.

✍ *Note: The minimum and maximum values are retained even if the instrument is turned off.*

TWA Display (Hygiene Mode)

```
TWA    360
     0      0
```

Shows the user's TWA (Time Weighted Average) exposure for each toxic gas, and the time period over which the calculation was made. The above display shows an exposure time period of 360 minutes.

A worker's maximum TWA exposure limit is defined as the average concentration of a toxic gas to which nearly all workers may be repeatedly exposed to, day after day, without adverse effect for a normal 8-hour workday and a 40-hour workweek.

STEL Display (Hygiene Mode)

```
STEL    15
     0      0
```

Shows the user's STEL (Short Term Exposure Limit) for each toxic gas, and the time period over which the calculation was made.

A worker's STEL is defined as the concentration to which workers can be exposed continuously for a short period of time without suffering adverse effects. STEL is further defined as a 15-minute time-weighted average exposure that should not be exceeded at any time during a work day

even if the 8-hour TWA exposure is within prescribed limits.

Battery Condition & Sensor Label Display (All Modes)

```
▯ 4.2V     LEL
 CO        H2S
```

Displays:

- Battery information consisting of either the voltage of the alkaline cells, or remaining capacity in percent of the NiMH battery pack.
- Whether the combustibles channel is setup to display %LEL or %CH4.
- Names of the installed toxic sensors.

Remaining Log Time (Supervisory and Hygiene Modes)

```
REMAINING
LOG TIME xxx
```

Where xxx is the remaining number of hours left in memory for logging data.

Date & Time Display (All Modes)

```
04/16/97
     14:45:05
```

Displays:

- Month / Day / Year
- Hour (24 hr format), Minute, and Second

Alarms

All Bodyguard instruments are supplied with both visual and audible alarms that warn you of possible hazardous environments. The visual alarm consists of two red LEDs that are located on the front and bottom of the instrument. The audible alarm consists of a piezoelectric sound transducer that produces alternating tones.

Low- and high-gas alarms can be set to provide first a warning and then an alarm (except for oxygen) of when predetermined gas levels are exceeded. Oxygen alarms are set for minimum and maximum levels. When the low-gas alarm level is exceeded, the LEDs flash and the audible alarm pulsates at a rate of once-per-second. And if the high-gas alarm level is then exceeded, the rate increases to twice-per-second.

In addition to the low/high-gas alarms, there are TWA and STEL alarms that are activated when the instrument is setup for Hygiene operation (see Chapter *3, Turning on the Data Logging, Min/Max, TWA, and STEL Functions*).

For instruments that are setup for either Basic or Supervisory operation, a flashing reading in the Normal Gas Display always indicates a low/high-gas alarm. For instruments that are setup for Hygiene operation, however, a flashing toxic gas reading could also indicate a TWA or STEL alarm. To determine the nature of an alarm for instruments that are setup for Hygiene

operation, press the button to show the TWA and STEL displays and look for the display that contains a reading that is also flashing.

Once a TWA or STEL alarm has been triggered, you can silence the audible alarm by pressing the button; however, the visual alarm LEDs and the gas readings will continue to flash until either the user's exposure has dropped below the alarm trip point, or until the TWA and STEL values are cleared as described in Section "*Clearing the Min/Max, TWA, or STEL Display Values*".

Note: You will not be able to download a user's exposure data to a computer or printer once the TWA and STEL values have been cleared.

Resetting the Alarms

Latching Alarms

Latching alarms are used to lock the instrument into its alarm state, even when the gas level drops below the alarm set point. For example, the alarms continue if you: 1) disregard an alarm and leave the area before looking at the instrument; 2) check a confined space by lowering the instrument

down on a rope and then pulling the instrument back up into fresh air; 3) are exposed to a short burst of gas.

When the Bodyguard goes into an alarm state, you can turn off the alarms by pressing the Ø button. If this button is pressed while you are still in a hazardous area, however, the audible alarm shuts off, but the visual alarm continues to flash until the gas level falls below the alarm set point.

Note: Low and high alarms act independently. If a low alarm occurs and is acknowledged, and then a high alarm occurs, the audible alarm will again sound.

Non-Latching Alarms

When the Bodyguard is set up for non-latching alarms, both the visual and audible alarms *automatically* turn off when the gas level drops below the alarm point.

Note: The Ø button does not shut off the alarms in the non-latching alarm mode.

Clearing the Min/Max, TWA, or STEL Display Values

To clear the values in the Min / Max, TWA, or STEL display, do the following:

1. Press the button until the values you want cleared are displayed.

2. Press and hold down the button for 3 seconds.

   While the button is being held down, the following display will count down (3-2-1):

```
HOLD TO
RESET    3
```

Note: If the button is released before the 3-second countdown is complete, the values are not cleared and the instrument returns to its previous display.

At the end of 3 seconds one of the following messages is displayed while the microprocessor clears the stored values from memory:

```
RESETTING
MIN/MAX
```

```
RESETTING
 TWA & STEL
```

```
RESETTING
STEL
```

After the values have been cleared, the instrument returns to its previous display.

Notes:

- *The values in the Min / Max display are reset to current gas values.*
- *Resetting the TWA value to zero* ***also clears*** *the STEL values.*
- *Resetting the STEL value to zero* ***does not*** *clear the TWA values.*

Downloading Data

When the Bodyguard is set up for Supervisory or Hygiene operation, the current gas readings are stored at 1, 2, 5, or 10 minute intervals (refer to Section "*Setting the Data Logging Interval*.")

Stored data can be downloaded to a computer using the instrument's serial data port and the supplied cable. The data is comma delimited, allowing it to be saved as an ASCII text file and then imported into spreadsheet and database programs.

Tip: Pressing the (Ø) *button at any point in the following procedures cancels the current action and returns the instrument to the previous display.*

Downloading Data to a Computer:

To download data to a computer, perform the following:

1. Before starting the download process, a communication program (e.g., Windows™ Terminal; Win95 Hyper Terminal; Procomm Plus) must first be set up and configured to capture an ASCII text file from the COM port to which the Bodyguard will be connected.

   Referring to the communication program's instruction manual, configure its communication settings as follows:

   - ❑ Baud Rate 2400
   - ❑ Data Bits 8
   - ❑ Parity ..... None
   - ❑ Stop Bits 1
   - ❑ Flow Control ..... None
   - ❑ Parity Check ..... Off
   - ❑ Carrier Detect ..... Off
   - ❑ Select an unused external communications port (COM1 thru COM4).

2. Using Serial Cable 54-0274 supplied by Bacharach, connect the Bodyguard's data port to the computer COM port that was chosen in Step 1. Note that if the computer has a 25-pin serial connector, a 9-pin to 25-pin adapter, and possibly a gender changer, will be necessary to make the computer connection.

Computer Serial Connection

3. Turn ON the Bodyguard and allow it complete its warm-up sequence.

4. With the instrument in its Normal Gas Display mode, use the calibration tool to press the "↵" switch on the side of the instrument.

   You will see the following display for 2 seconds:

   ```
   DOWNLOAD
   MENU
   ```

   Followed by the display:

   ```
   DOWNLOAD
   DATA
   ```

5. Again press the "↵" switch.

   You will see the display:

```
PRESS [-] TO
DOWNLOAD
```

6. On the computer, prepare the communications program to capture and store a text file.

7. Press the "–" switch on the side of the instrument to begin downloading.

   You will see the display

```
DOWNLOADING
DATA
```

   during the download process. The data is displayed on the computer monitor as it's being written to a file. When downloading is complete, you will see the display:

```
DOWNLOAD
COMLETE
```

   Followed by:

```
DOWNLOAD
DATA
```

8. On the computer, close the text file.

9. The Bodyguard's data is now stored as an ASCII text file on disk, and can be viewed with a text editor such as Windows Notepad or a word processor capable of importing text files.

10. You can now either clear the stored data (see Section "*Clearing Memory*" starting at Step 2), or return to normal operation by pressing the (Ø) button until the Normal Gas Display appears.

Printing

To print the stored data, perform the following:

1. Configure an 80-column or larger serial printer as follows:

   - ❑ Baud Rate 2400
   - ❑ Data Bits 8
   - ❑ Parity ..... None
   - ❑ Stop Bits 1

2. Connect the printer to the Bodyguard's data port using Serial Data Cable 54-0274. Note that a 9-pin to 25-pin adapter may be necessary to make the printer connection.

3. Turn ON the Bodyguard and allow it complete its warm-up sequence.

4. With the instrument showing its Normal Gas Display, use the calibration tool to press the "↵" switch on the side of the instrument.

   You will see the following display for 2 seconds:

```
DOWNLOAD
MENU
```

Followed by the display:

```
DOWNLOAD
DATA
```

5. Again press the "↵" switch.

   You will see the display:

```
PRESS [–] TO
DOWNLOAD
```

6. Press the "–" switch to begin printing.

   You will see the display

```
DOWNLOADING
DATA
```

   while printing, followed by

```
DOWNLOAD
COMPLETE
```

when printing ends, followed by:

```
DOWNLOAD
DATA
```

7. You can now either clear the stored data (refer to Section "*Clearing Memory*" starting at Step 2), or return to the Normal Gas Display by pressing the (Ø) button.

Clearing Memory

Do the following to clear the gas readings that have been stored in memory.

☞ *Tip: Pressing the (Ø) button at any point in the following procedure cancels the current action and returns the instrument to the previous display.*

1. While the instrument is in its Normal Gas Display mode, use the calibration tool to press the "↵" switch on the side of the instrument.

   You will see the following display for 2 seconds:

   ```
   DOWNLOAD
   MENU
   ```

   Followed by the display:

   ```
   DOWNLOAD
   DATA
   ```

2. Press the button.

   You will see the display:

   ```
   CLEAR DATA
   ```

3. Press the "↵" switch.

   You will see the display:

   ```
   PRESS [–] TO
   CLEAR DATA
   ```

4. Press the "–" switch on the side of the instrument.

   You will see this display:

   ```
   STORED DATA
   CLEARED
   ```

   Followed by the Normal Gas Display.

Chapter 3: Setting Up the Bodyguard

Setting the Clock

The data logging function uses date and time stamps to identify when the data was taken. To ensure that these stamps are correct, set the clock as follows:

☞ *Tip: Pressing the ⊘ button at any point in the following procedure cancels the current action and returns the instrument to the previous display.*

☞ *Tip: The "+" and "–" switches have a two-speed-repeat rate when they are used to increment and decrement values within the display. When either switch is held down for more than 1 second, the repeat rate is 2 times per second for the first 5 seconds, and then increases to 10 times per second.*

1. Press the button until the Bodyguard displays the Date & Time; then use the calibration tool to press the "↵" switch on the side of the instrument.

   You will see the following display for 2 seconds:

   ```
   MAINTENANCE
   MENUS
   ```

Followed by:

```
CALIBRATION
MENU
```

2. Press the button.

   You will see the display:

```
SET-UP
MENU
```

3. Press the "↵" switch two times.

   You will see the displays:

```
SET CLOCK
```

```
SET DATE
```

4. To continue setting the date, press the "↵" switch. But if you want to skip the date and instead set the time, press the button and proceed to Step 11.

   If the "↵" switch was pressed, you will see the following display with the date-set indicators under the month field.

```
mm/dd/yy
^^
```

5. Press the "+" or "–" switch as necessary until the correct month is shown.

6. Press the "↵" switch.

   Observe that the date-set indicators move under the day field.

```
mm/dd/yy
    ^^
```

7. Press the "+" or "–" switch as necessary until the correct day is shown.

8. Press the "↵" switch.

   Observe that the date-set indicators move under the year field.

```
mm/dd/yy
        ^^
```

9. Press the "+" or "–" switch as necessary until the correct year is shown.

10. Save the date settings by pressing the "↵" switch.

    You will see the display:

```
SET TIME
```

11. Press the "↵" switch.

    You will see the following display with the time-set indicators under the hour field.

```
hh:mm
^^
```

12. Press the "+" or "–" switch as necessary until the correct hour is shown (24-hour format).

13. Press the "↵" switch.

    Observe that the time-set indicators move under the minute field.

```
hh: mm
    ^ ^
```

14. Press the "+" or "–" switch as necessary until the correct minute is shown.

15. Save the time settings and set the seconds count to zero by pressing the "↵" switch.

    You will then see the display:

```
SET CLOCK
```

16. Exit this mode by repeatedly pressing the (Ø) button until the Normal Gas Display appears.

Selecting Latching / Non-Latching Alarms

To turn the latching alarm feature on or off, complete the following:

☞ *Tip: Pressing the (Ø) button at any point in the following procedure cancels the current action and returns the instrument to the previous display.*

1. Press the (⚙) button until the Bodyguard shows the Date and Time Display; then use the calibration tool to

press the "↵" switch on the side of the instrument.

You will see the following display for 2 seconds:

```
MAINTENANCE
MENUS
```

Followed by:

```
CALIBRATION
MENU
```

2. Press the button.

   You will see the display:

```
SET-UP
MENU
```

3. Press the "↵" switch.

   You will see the display:

```
SET CLOCK
```

4. Press the button.

   You will see the display:

```
SET ALARMS
```

5. Press the "↵" switch two times.

   You will see the displays:

```
SET ALARM
TYPE
```

```
ALARM TYPE:
xx
```

Where xx indicates the current alarm type as being either LATCHING *or* NON-LATCHING.

6. Press either the "+" or "–" switch to toggle between latching and non-latching.

7. After selecting the desired alarm type, save the selection by pressing the "↵" switch.

8. Exit this procedure by repeatedly pressing the (Ø) button until the Normal Gas Display appears.

Setting Alarm Levels

Your Bodyguard has two preset gas-level alarms for each sensor installed. (Refer to *Chapter 6: Alarm Setpoints* for a listing of the default alarm values.) To adjust the alarm levels, complete the following:

☞ *Tip: Pressing the (⊜) button at any point in the following procedure cancels the current action and returns the instrument to the previous display.*

☞ *Tip: The "+" and "–" switches have a two-speed-repeat rate when they are used to increment and decrement values within the display. When either switch is held down for more than 1 second, the*

repeat rate is 2 times per second for the first 5 seconds, and then increases to 10 times per second.

1. Press the button until the Bodyguard shows the Date and Time Display; then use the calibration tool to press the "↵" switch on the side of the instrument.

   You will see the following display for 2 seconds:

   ```
   MAINTENANCE
   MENUS
   ```

   Followed by:

   ```
   SET-UP
   MENU
   ```

2. Press the button.

   You will see the display:

   ```
   SETTINGS
   MENU
   ```

3. Press the "↵" switch.

   You will see the display:

   ```
   SET CLOCK
   ```

4. Press the button.

   You will see the display:

   ```
   SET ALARMS
   ```

5. Press the "↵" switch three times.

   You will see the displays:

```
SET ALARM
TYPE
```

```
ALARM TYPE:
xx
```

   Where "xx" is either LATCHING *or* NON-LATCHING.

```
O2 LOW
ALARM:  nn.n
```

   Where "nn.n" is the current oxygen-low alarm level.

6. Press the "+" and "–" switches to change the alarm level. Pressing the "↵" switch saves the displayed value and moves to the "HIGH" display.

7. Again press the "+" and "–" switches to change the "HIGH" value; then press the "↵" switch to save the displayed value and move to the next sensor.

8. Repeat Steps 6 and 7 for each sensor.

   If your Bodyguard has a toxic sensor installed and is set up for Hygiene operation, then in addition to setting the low and high alarms you must also set the alarm levels for TWA and STEL. Again use the "+", "–" and "↵" switches to adjust and save the setpoints of these alarms.

After the alarm levels for the last sensor have been saved, you will see the display:

```
SET ALARMS
```

9. Exit this mode by repeatedly pressing the Ø button until the Normal Gas Display appears.

Turning On the Data Logging, Min/Max, TWA, and STEL Functions

The Bodyguard has three modes of operation that determine what type of information is displayed when the button is pressed from the Normal Gas Display.

BASIC Mode

BASIC is the default operating mode, and provides a user the ability to view the instrument's Normal Gas Display, the Battery Voltage and Sensor Display, and the Date and Time Display. Note that the data logging function is turned off in this mode.

SUPERVISORY Mode

In addition to the displays available in the BASIC mode, the SUPERVISORY mode activates the instrument's data logging function, and provides the added ability to view the Min / Max Gas Display and to download or print the recorded min/max values stored in memory.

HYGIENE Mode

In addition to the displays available in the BASIC and SUPERVISORY modes, the HYGIENE mode activates the instrument's TWA and STEL functions, which provide the added ability to view the TWA and STEL Displays, and to download or print the recorded min/max values plus the values of TWA and STEL.

To change the Bodyguard's mode of operation, complete the following:

☞ *Tip: Pressing the* [Ø] *button at any point in the following procedure cancels the current action and returns the instrument to the previous display.*

✍ *Note: Changing the instrument's mode of operation will* ***erase*** *all stored data.*

1. Press the [⚙] button until the Bodyguard shows the Date and Time Display; then use the calibration tool to press the "↵" switch on the side of the instrument.

   You will see the following display for 2 seconds:

   ```
   MAINTENANCE
   MENUS
   ```

   Followed by:

   ```
   CALIBRATION
   MENU
   ```

2. Press the button.

   You will see the display:

```
SET-UP
MENU
```

3. Press the "↵" switch.

   You will see the display:

```
SET CLOCK
```

4. Press the button two times.

   You will see the displays:

```
SET ALARMS
```

```
SET MODE
```

5. Press the "↵" switch.

   You will see the display:

```
MODE:
xx
```

   Where xx indicates the current mode as being either BASIC, SUPERVISORY, *or* HYGIENE.

6. Press the "+" or "–" switch until the desired mode of operation is displayed.

7. Press the "↵" switch to save the chosen mode.

8. Exit back to normal operation by repeatedly pressing the button until the Normal Gas Display appears.

Setting the Data Logging Interval

Current gas readings can be stored in memory for later retrieval in 1, 2, 5, or 10 minute intervals. The amount of time available for logging ranges from 13 to 136 hours, dependant upon the chosen logging interval.

Logging Interval Minutes	Available Logging Hours
1	13
2	27
5	68
10	136

To select the desired data logging interval, complete the following:

Note: Changing the logging interval will ***erase*** *all stored data.*

Tip: Pressing the ⌀ *button at any point in the following procedure cancels the current action and returns the instrument to the previous display.*

1. Press the button until the Bodyguard shows the Date and Time Display; then use the calibration tool to press the "↵" switch on the side of the instrument.

   You will see the following display for 2 seconds:

```
MAINTENANCE
MENUS
```

Followed by:

```
CALIBRATION
MENU
```

2. Press the button.

   You will see the display:

```
SET-UP
MENU
```

3. Press the "↵" switch.

   You will see the display:

```
SET CLOCK
```

4. Press the button three times.

   You will see the displays:

```
SET ALARMS
```

```
SET MODE
```

```
SET LOGGING
INTERVAL
```

5. Press the "↵" switch.

   You will see the display:

```
LOGGING
INTERVAL: nn
```

   Where nn is the current interval in minutes.

6. Press the "+" or "–" switch to set the interval at either 1, 2, 5, or 10 minutes.

7. Press the "↵" switch to save the displayed interval.

8. Exit this mode by repeatedly pressing the Ø button until the Normal Gas Display appears.

Selecting Combustibles Display Units of Measure

The Bodyguard is supplied with its combustibles display set up to show gas levels in %LEL. To change the display to %CH4, complete the following:

Note: This procedure can only be performed on instruments that have a combustibles sensor installed.

Tip: Pressing the Ø button at any point in the following procedure cancels the current action and returns the instrument to the previous display.

1. Press the button until the Bodyguard shows the Date and Time Display; then use the calibration tool to press the "↵" switch on the side of the instrument.

   You will see the following display for 2 seconds:

   ```
   MAINTENANCE
   MENUS
   ```

Followed by:

```
CALIBRATION
MENU
```

2. Press the button.

   You will see the display:

```
SET-UP
MENU
```

3. Press the "↵" switch.

   You will see the display:

```
SET CLOCK
```

4. Press the button (three or four times depending on the instrument's mode of operation) until you see the display:

```
SET COMB
UNITS
```

5. Press the "↵" switch.

   You will see the following display if the instrument is set up for %LEL:

```
COMB UNITS:
     LEL
```

6. Press the "+" or "–" switch to choose between %LEL and %CH4.

7. Press the "↵" switch to save the displayed units of measure.

8. Exit this mode by repeatedly pressing the button until the Normal Gas Display appears.

Changing the Calibration Gas Levels

Your Bodyguard is set up at the factory to expect specific gas levels during calibration (refer to *Chapter 6: Calibration Gas Levels* for a listing of the default settings). To change these gas levels, complete the following:

Note: The following procedure assumes that the Bodyguard has a combustibles and two toxic sensor installed. If your instrument has fewer sensors, then only those sensors that are installed will be displayed.

Tip: Pressing the ⌀ button at any point in the following procedure cancels the current action and returns the instrument to the previous display.

Tip: The "+" and "–" switches have a two-speed-repeat rate when they are used to increment and decrement values within the display. When either switch is held down for more than 1 second, the repeat rate is 2 times per second for the first 5 seconds, and then increases to 10 times per second.

1. Press the button until the Bodyguard shows the Date and Time Display; then use the calibration tool to press the "↵" switch on the side of the instrument.

You will see the following display for 2 seconds:

```
MAINTENANCE
MENUS
```

Followed by:

```
CALIBRATION
MENU
```

2. Press the "↵" switch.

   You will see the display:

```
CALIBRATE
MULTIPLE GAS
```

3. Press the button two times.

   You will see the displays:

```
CALIBRATE
SINGLE GAS
```

```
ADJUST
CAL GAS
```

4. Press the "↵" switch.

   You will see the display:

```
ADJUST COMB:
   nn LEL
```

   Where "nn" is the current combustibles calibration setpoint in %LEL (or %CH4).

5. Press the "+" or "–" switch to change the calibration gas level. Pressing the "↵" switch saves the displayed value and moves to the next sensor.

6. Repeat Step 5 for the remaining sensors.

   You will see the following display after the last gas value has been set:

```
ADJUST
CAL GAS
```

7. Press the button until the Normal Gas Display appears.

Returning to Factory Defaults

The Bodyguard can be returned to both its default gas-alarm setpoints and calibration-gas levels (refer to *Chapter 6: Factory Defaults*) by completing the following:

☞ *Tip: Pressing the button at any point in the following procedure cancels the current action and returns the instrument to the previous display.*

1. Press the button until the Bodyguard shows the Date and Time Display; then use the calibration tool to press the "↵" switch on the side of the instrument.

You will see the following display for 2 seconds:

```
MAINTENANCE
MENUS
```

Followed by:

```
CALIBRATION
MENU
```

2. Press the button.

   You will see the display:

```
SET-UP
MENU
```

3. Press the "↵" switch.

   You will see the display:

```
SET CLOCK
```

4. Press the button (four or five times depending on the instrument's mode of operation) until you see the display:

```
SET FACTORY
DEFAULTS
```

5. Press the "↵" switch to return to factory defaults.

   You will see the display:

```
DEFAULTS
 SET
```

   Followed by:

```
SET FACTORY
DEFAULTS
```

6. Exit this procedure by pressing the button until the Normal Gas Display appears.

Chapter 4: Calibrating the Bodyguard

Calibration consists of zeroing the instrument (in fresh air or using a zero-gas cylinder) and then applying calibration gas.

Your Bodyguard was programmed at the factory to automatically calibrate itself to the calibration gas cylinders listed under the heading *Calibration Equipment*. To ensure accurate calibration, we recommend using only these cylinders.

Note: To check the current calibration gas settings, or to re-program the instrument to different concentrations of calibration gas, refer to "Chapter 3: Changing the Calibration Gas Levels."

Calibration Equipment

You will need the following equipment for calibration:

- ❑ Calibration Cup (supplied)
- ❑ Calibration Tool (supplied)
- ❑ Calibration Kit, Part No. 51-2979
- ❑ Appropriate Calibration Gas Cylinder(s) – Choose cylinder(s) to match the sensors that are installed in your instrument.

Multiple Gas Cylinders (use one of these cylinders when using the Automatic Calibration Method):

- Part No. 54-0298
  21% O_2
  50% LEL Methane
  250 ppm Carbon Monoxide
  40 ppm Hydrogen Sulfide

- Part No. 51-2969
  21% O_2
  50% LEL Methane
  250 ppm Carbon Monoxide

- Part No. 51-2897
  21% O_2
  50% LEL Methane
  40 ppm Hydrogen Sulfide

Single Gas Cylinders (use one or more of these cylinders when using the Manual Sensor Calibration Method):

- Methane: Part No. 51-1121
  50% LEL

- Carbon Monoxide: Part No. 51-2278
  250 ppm

- Hydrogen Sulfide: Part No. 51-1672
  40 ppm

Optional Zero-Gas Cylinder (used during calibration if surrounding air is of questionable quality):

- Zero Gas: Part No. 51-7131
  20.9% O_2

Calibration Equipment

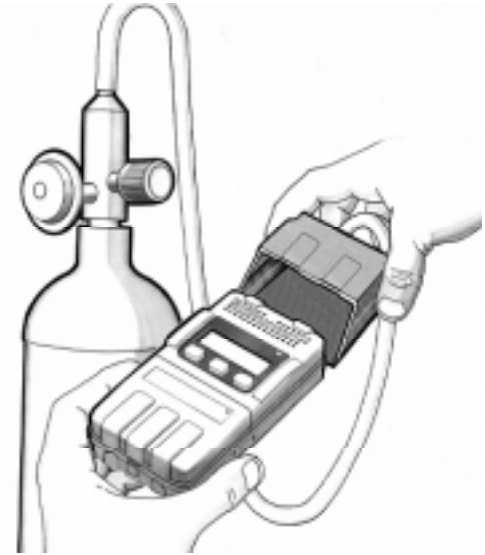

Setup

Assemble the calibration equipment as described below. This equipment is used to either apply zero gas or calibration gas to the instrument.

1. Install the regulator from the calibration kit on the appropriate gas cylinder.
2. Connect together the hoses supplied in the calibration kit with the supplied connector.
3. Install the larger diameter hose to the regulator.
4. Install the smaller diameter hose to the calibration cup.

Calibration

The Bodyguard can be calibrated either by using a multiple-gas cylinder (automatic calibration method), or by using single-gas cylinders (manual calibration method). To ensure accurate calibration, we recommend using only Bacharach gas cylinders.

▲ *WARNING: If the applied calibration gases do not match the expected concentrations, the instrument will show incorrect gas readings. To ensure your safety, be sure the instrument is programmed to expect the correct concentration of calibration gas (refer to "Chapter 3: Changing the Calibration Gas Levels").*

Automatic Calibration Method

This procedure is used to calibrate all sensors at the same time by using a multiple-gas cylinder that has a mixture of all the appropriate calibration gases.

Perform this procedure in fresh air (clear of all combustible and toxic gases). If the surrounding air is of questionable quality, apply zero gas when the instrument zeros itself during Step 4.

▲ *WARNING: Use of a four gas cylinder to calibrate a Bodyguard measuring LEL, O_2, H_2S and CO is acceptable with the following caution. All electrochemical CO sensors have a cross sensitivity to H_2S. The Bacharach 54-7003 CO sensor*

has a filter to eliminate this H_2S cross sensitivity. This filter is rated for 800 ppm hours of H_2S exposure. The filter will easily last well over the life of the sensor, even on a weekly calibration schedule with intermittent low level (around TLV) H_2S exposure. However, constant long term exposure to low background levels of H_2S may cause premature breakthrough of the filter. This can provide an erroneous CO calibration, perhaps as much as 50% low. Caution should be exercised in constant low level H_2S background areas; check the CO sensor calibration on a separate CO-only cylinder at regular intervals to verify the integrity of the calibration.

☞ *Tip: Pressing the* [Ø] *button at any point in the following procedure cancels the current action and returns the instrument to the previous display.*

1. Turn on the Bodyguard and allow it to switch to its Normal Gas Display. Then wait until all reading stabilize before proceeding to Step 2.

2. Press the [⚙] button until you see the Date and Time Display; then use the calibration tool to press the "↵" switch on the side of the instrument.

   You will see the following display for 2 seconds:

```
MAINTENANCE
MENUS
```

Followed by:

```
CALIBRATION
MENU
```

3. Press the "↵" switch.

   You will see the display:

```
CALIBRATE
MULTIPLE GAS
```

4. Press the "↵" switch again.

   You will see the display:

```
ZEROING
 SENSORS
```

   Followed by:

```
20.9      0
   0      0
```

Followed by:

```
APPLY
 CAL GAS
```

5. With the calibration equipment set up as previously described, apply calibration gas by: 1) attaching the appropriate gas cylinder to the regulator of the calibration equipment, 2) attaching the calibration cup to the instrument, and 3) opening the regulator all the way counterclockwise.

☞ *Tip: Pressing the (Ø) button will exit the calibration routine without changing the present calibration settings. If the instrument was allowed to zero itself, the new zero settings have already been saved.*

Note: During calibration you will see the display show increasing gas levels. When calibration is complete, the instrument beeps once, and the gas levels shown just before "OK" appears indicates the gas levels to which the instrument has just been calibrated. These numbers should match the concentration stamped on the calibration gas cylinder.

When all sensors have been successfully calibrated, you will see the display:

```
CAL        OK
OK         OK
```

Followed by:

```
CALIBRATION
  COMPLETE
```

Followed by:

```
REMOVE
 CAL GAS
```

6. Turn off the regulator; then remove the calibration cup.

   The instrument returns to the Normal Gas Display after the calibration gas levels surrounding the sensors have dropped below their alarm setpoints.

Manual Calibration Method

This procedure is used to calibrate each sensor individually, and is intended to be done in fresh air (clear of all combustible and toxic gases). If the surrounding air is questionable, apply zero gas while the instrument zeros itself during Step 4 of this procedure.

☞ *Tip: Pressing the Ø button at any point in the following procedure cancels the current action and returns the instrument to the previous display.*

1. Turn on the Bodyguard and allow it to switch to its Normal Gas Display. Then wait until all reading stabilize before proceeding to Step 2.

2. Press the button until the Bodyguard shows the Date and Time Display; then use the calibration tool to press the "↵" switch on the side of the instrument.

   You will see the following display for 2 seconds:

   ```
   MAINTENANCE
   MENUS
   ```

   Followed by:

   ```
   CALIBRATION
   MENU
   ```

2. Press the "↵" switch.

   You will see the display:

   ```
   CALIBRATE
   MULTIPLE GAS
   ```

3. Press the button.

   You will see the display:

```
CALIBRATE
SINGLE GAS
```

4. Press the "↵" switch.

   You will see the display:

```
ZEROING
 SENSORS
```

   Followed by:

```
20.9      0
   0      0
```

   Followed by the display of the first sensor to be calibrated:

```
APPLY COMB
 CAL GAS
```

Note: The oxygen sensor was calibrated when the sensors were zeroed.

Tip: Pressing the button will exit the calibration routine without changing the present calibration settings. If the instrument was allowed to zero itself, the new zero settings have already been saved.

5. If you do not wish to calibrate the first sensor, press the button until the sensor that needs calibrated is displayed.

6. With the calibration equipment set up as previously described, apply calibration gas by: 1) attaching the appropriate gas cylinder to the regulator of the

calibration equipment, 2) attaching the calibration cup to the instrument, and 3) opening the regulator all the way counterclockwise.

During calibration the display will show an increasing gas reading. Then when calibration is complete, the instrument beeps once and the gas reading shown just before "OK" appears indicates the gas level to which the instrument has just been calibrated. This number should match the concentration stamped on the calibration gas cylinder.

When the sensor has been successfully calibrated you will see the display:

```
CAL        OK
```

Followed by the display of the next sensor to be calibrated.

7. Turn off the regulator and remove it from the gas cylinder.

8. If you are going to continue the calibration process with additional single-gas cylinders, then apply the next appropriate gas per Step 6; otherwise, end the calibration process by proceeding to step 9.

9. After the last sensor has been calibrated, remove the calibration cup.

   The following display automatically appears if the last sensor calibrated is also the last sensor installed in the instrument. If the last sensor calibrated is not the last sensor installed, then press the  *button as necessary to complete the calibration process.*

```
CALIBRATION
  COMPLETE
```

At the end of calibration, if the calibration gas level inside the instrument exceeds an alarm setpoint you will see the display:

```
REMOVE
 CAL GAS
```

The instrument returns to the Normal Gas Display after the calibration gas has been removed and after the gas level drops below its alarm setpoints.

Chapter 5: Bodyguard Maintenance

Cleaning the Bodyguard

To clean the case, wipe the outside with a soft clean cloth. Never use solvents or cleaning solutions, as they may damage the case.

The sensor openings are protected with a porous, filter paper that prevents dirt from entering the instrument. Never use a pin to clean these openings. If the filter becomes damaged, replace it and its associated foam gasket. Refer to the heading *Replacing the Sensor Filter and Gasket* in this chapter.

Replacing the Alkaline Batteries or the Rechargeable Battery Pack

The Bodyguard is powered by either three "AA" Alkaline batteries, or a NiMH rechargeable battery pack. To replace a set of Alkaline batteries that are drained, or a battery pack that will no longer hold a charge, perform the following:

▲ *WARNING: Remove the battery compartment cover only in non-hazardous areas.*

Removing the Battery Compartment Cover

1. Using the calibration tool, loosen the two socket-head screws on the back of the instrument.

2. Remove and discard either the . . .

   - three alkaline batteries, or

   - the defective rechargeable battery pack.

✍ *Note: the battery-compartment cover is part of the rechargeable battery pack and is also discarded.*

3. Insert either . . .

   - three fresh “AA” batteries (be sure to observe proper polarity as marked inside the battery compartment), or

   - a new rechargeable battery pack.

4. Replace the battery-compartment cover and tighten its screws.

Alkaline Battery Installation

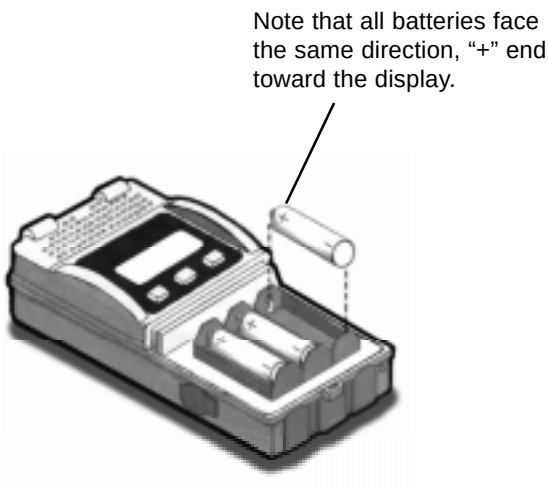

Rechargeable Battery Pack Installation

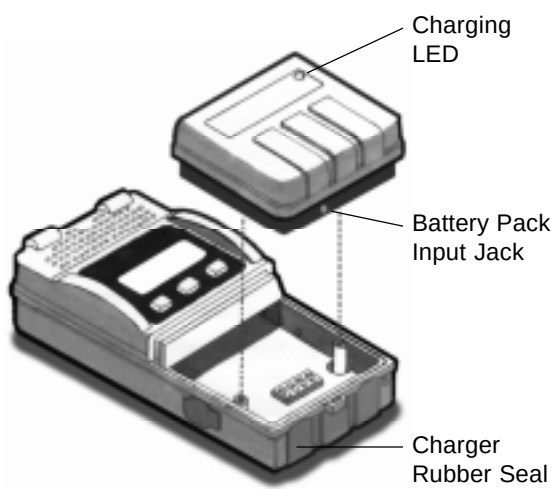

Charging the Rechargeable Battery Pack

▲ *WARNINGS:*

- *A battery charger that is plugged into a wall socket is not intrinsically safe.*
- *Charge the battery pack only in* ***non-hazardous*** *areas.*
- *Only use Bacharach approved chargers.*

1. Turn OFF the Bodyguard.
2. Plug the single-line charger into the appropriate AC wall outlet.
3. Remove the rubber seal marked "Charger" that covers the battery pack's input jack; then plug the charger's output connector into the jack. Observe that a red LED on the front of the instrument lights, indicating that the battery pack is being charged.

☞ *Tip: The battery pack can also be charged separately from the instrument.*

4. Allow a depleted battery pack to charge a minimum of 10 hours.

Replacing the Sensors

To replace any of the Bodyguard's sensors, complete the following:

1. Obtain a replacement sensor. (Refer to *Chapter 10: Replacement Parts.)*

Sensor, Gasket, and Lithium Battery Replacement

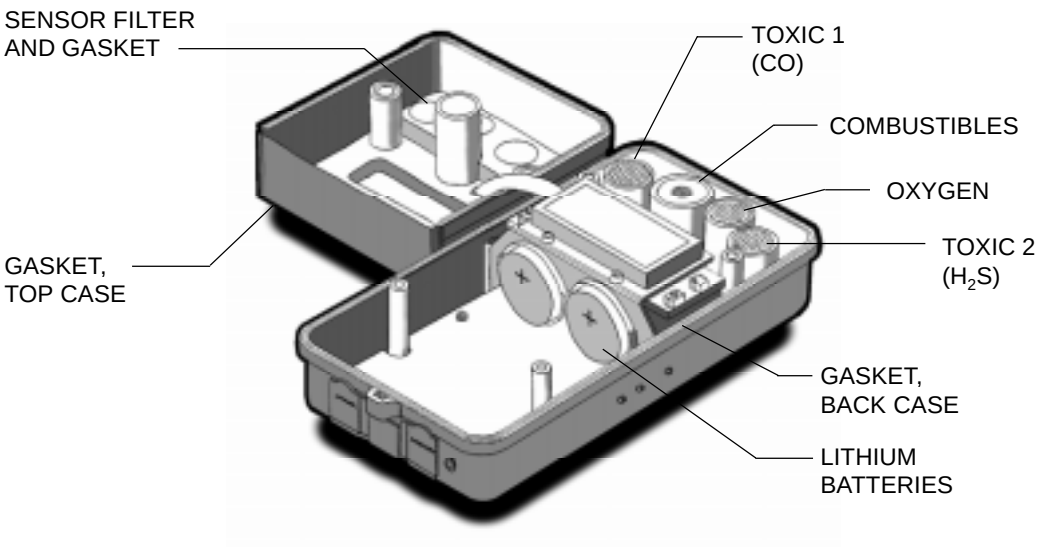

2. Using the calibration tool, loosen the four socket-head screws on the back of the instrument.

3. Lay the instrument face up on your work area; remove the battery cover; then carefully lift up the top portion of the front case and lay it to the left of the base, being careful not to pull on the interconnecting ribbon cable.

4. Unplug the appropriate sensor by pulling straight up.

5. If replacing a toxic sensor, remove the “shorting-jumper” from the pins of the new sensor.

6. Align the pins of the new sensor with its associated socket. Then press the sensor down until it is firmly seated.

7. Reassemble the instrument. Then calibrate the sensor(s) per *Chapter 4: Calibrating the Bodyguard*.

Replacing the Sensor Filter and Gasket

To replace the sensor filter and gasket, which are located inside the top portion of the front case, complete the following:

1. Obtain the following replacement parts:
   - Foam Tape Adhesive (54-0239)
   - Filter Paper (54-0240)
   - Foam Sensor Gasket (54-0238)

2. Using the calibration tool, loosen the four socket-head screws on the back of the instrument.

3. Lay the instrument face up on your work area; remove the battery cover; then carefully lift up the top portion of the front case and lay it to the left of the base, being careful not to pull on the interconnecting ribbon cable.

4. Note the positioning of the old gasket. Then peel off the old foam sensor gasket, filter paper, and foam tape adhesive. Remove all glue residue from the inside of the case.

5. Remove paper backing from one side of the Foam Tape Adhesive (54-0239) and place it inside the front case over the sensor openings.

6. Remove paper backing from the other side of the Foam Tape Adhesive; then place the Filter Paper (54-0240) on top of the Foam Tape Adhesive.

7. Remove paper backing from the Foam Sensor Gasket (54-0238) and place it on top of the Filter Paper.

8. Reassemble the instrument.

Replacing the Case Gaskets

Should the sealing gasket either around the edge of the back case, or the gasket attached to the top case become cut, torn or permanently damaged, the instrument's radio-frequency protection and water-resistant seal may be compromised. To replace either of these gaskets, complete the following:

1. Prepare a section of replacement gasket material as follows:
   - Back Case, 18 in. of Part No. 05-4808;
   - Top Case, 4 in. of Part No. 05-4809.

2. Remove old gasket and discard.

3. Install the new gasket inside the grove around the edge of either the back case or top cover. Be sure that the gasket lays flat and isn't twisted. Use a razor blade to trim off any extra gasket material. When installing the gasket in the back case, be sure there is no gap between the ends of the gasket.

4. Reassemble the instrument.

Replacing the Lithium Batteries

There are two Lithium batteries that provide bias voltage to the toxic sensors, and also power the instrument's internal clock. These batteries should be replaced every 1 to 2 years.

To replace the Lithium batteries, perform the following:

1. Obtain two replacement Lithium batteries (204-0022).

2. Using the calibration tool, loosen the two slotted screws and the two socket-head screws on the back of the instrument.

3. Lay the instrument face up on your work area; remove the battery cover; then lift up and lay aside the top portion of the front case, being careful not to pull on the interconnecting ribbon cable.

4. Remove the Lithium batteries by carefully prying them out from their sockets and then discard.

5. Install the new batteries with their “+” sides facing outward.

6. Reassemble the instrument.

7. Reset the clock per *Chapter 3: Setting the Clock*.

Chapter 6: Technical Information

Specifications

Gases Detected	Range	Resolution
Oxygen (O_2)	0–30%	0.1%
Combustible Gases:	0–100% LEL, 0–5% CH_4	1%, 0.05%
Toxic Gases:		
Carbon Monoxide (CO)	0–999 ppm	1 ppm
Hydrogen Sulfide (H_2S)	0–500 ppm	1 ppm
Ammonia (NH_3)	0–100 ppm	1 ppm

Gases Detected	Range	Resolution
Toxic Gases (Cont.):		
Sulfur Dioxide (SO_2)	0–100 ppm	1 ppm
Nitric Oxide (NO)	0–100 ppm	1 ppm
Nitrogen Dioxide (NO_2)	0–100 ppm	1 ppm
Chlorine (Cl_2)	0–20 ppm	1 ppm
Hydrogen Cyanide (HCN)	0–30 ppm	1 ppm
Hydrogen Chloride (HCl)	0–30 ppm	1 ppm

Power ..... 3 “AA” Alkaline Cells or NiMH Rechargeable Pack
Sampling Method ..... Diffusion (optional Sampling Pump)
Warm-Up Time ..... 60 sec
Response Time to 90% of Final Reading:
Oxygen ..... <30 sec
Combustibles ..... <30 sec
Toxics ..... 30 to 70 sec dependent upon type of sensor
Velocity ..... 0–305 m/min

Battery Life	8 hours minimum, 10 hours typical @ 25 °C using fresh cells or fully charged pack
Operating Temperature	–4 to 122 °F (–20 to 50 °C)
Relative Humidity	10 – 90% RH, non-condensing
Pressure	1 Standard Atmosphere, ±10%
Sensor Life:	
Oxygen	>1 yr
Combustibles	>1 yr
Toxics	>1 yr
Dimensions	3.25" L x 1.7" W x 6.25" H (83 x 43 x 403 mm)
Weight	16 oz (0.45 kg)
Construction	Weather resistant, three piece, metalized ABS, impact resistant plastic
RFI, EMI & ESD Interference	Conforms to EN-50081-1 and EN-50082-2
Hazardous Area Rating	Intrinsically safe for use in Class I, Divisions 1 & 2, Groups A, B, C and D; and Class II, Divisions 1 & 2, Groups E, F and G hazardous areas. European Group IIC, Zone 0, Temp. 4T. FM, CSA and CENELEC approvals pending.

Factory Defaults

When a Bodyguard is shipped from the factory, or when the instrument is returned to factory defaults (refer to *Chapter 3: Returning to Factory Defaults*), the following parameters, alarm setpoints, and calibration gas levels are in effect.

Default Parameters

Mode: ..... BASIC

Alarm Type: ..... LATCHING

Combustible Units: ..... LEL

Data Logging Interval: ..... 10 minutes

Alarm Setpoints

Gas	Adjustment Range	Factory Default Setpoints		
		Low Alarm*	High Alarm*	TWA & STEL
Oxygen (O_2)				
Low	15.0 – 20.5%	19.5%	N/A	N/A
High	21.5 – 27.0%	N/A	23.5%	N/A
Combustible Gases:				
LEL	5 – 90%	10%	20%	N/A
CH_4	0.25 – 4.50%	0.50%	1.00%	N/A
Toxic Gases:				
CO	10 – 600 ppm	35 ppm	50 ppm	35 ppm
H_2S	5 – 500 ppm	10 ppm	20 ppm	10 ppm
SO_2	3 – 60 ppm	5 ppm	10 ppm	5 ppm
NO_2	3 – 40 ppm	3 ppm	5 ppm	3 ppm

Alarm Setpoints (Cont.)

Gas	Adjustment Range	Factory Default Setpoints		
		Low Alarm*	High Alarm*	TWA & STEL
NO	10 – 100 ppm	25 ppm	50 ppm	25 ppm
Cl_2	0.1 – 5.0 ppm	0.5 ppm	1 ppm	0.5 ppm
NH_3	5 – 100 ppm	25 ppm	50 ppm	25 ppm
HCN	3 – 30 ppm	10 ppm	15 ppm	10 ppm
HCl	3 – 30 ppm	3 ppm	5 ppm	3 ppm

* High alarm cannot be set lower than the low alarm.

Calibration Gas Levels

Gas	Adjustment Range	Factory Default Setpoint
Oxygen (O_2)*	N/A	N/A
Combustibles:		
LEL	10 – 75 %	50 %
CH_4	0.05 – 3.75 %	2.50 %
Toxic Gases:		
CO	35 – 750 ppm	250 ppm
H_2S	10 – 500 ppm	40 ppm
SO_2	10 – 100 ppm	40 ppm
NO_2	10 – 100 ppm	20 ppm
NO	10 – 100 ppm	25 ppm

Calibration Gas Levels (Cont.)

Gas	Adjustment Range	Factory Default Setpoint
Cl_2	1.0 – 10.0 ppm	5.0 ppm
NH_3	20 – 100 ppm	25 ppm
HCN	5 – 30 ppm	5 ppm
HCl	5 – 30 ppm	5 ppm

* The oxygen sensor is calibrated to a level of 20.9% O_2 when the instrument zeros itself during calibration.

Chapter 7: Alarm / Warning Messages

The following table describes all of the alarm and warning conditions that could occur while operating the Bodyguard. The table lists the displayed message, when it will occur, a description of what the message means, and what action should be taken when the message appears.

Displayed Message	Occurs . . .	Description	Action
A/D ERROR	During “Warm-Up”.	Problem detected with the A to D Converter.	Message self clears after 3 seconds. Turn instrument off and then back on. If problem persists, return instrument to Bacharach for repair.
LITHIUM BATTERY LOW	During “Warm-Up”.	Lithium batteries are nearing end of their useful life.	Clear message by pressing the Ø button. You can now continue using the Bodyguard. Replace both lithium batteries as soon as possible.

Displayed Message	Occurs . . .	Description	Action
20.9 0 0 10 (Flashing reading accompanied by a two-tone beep)	During normal operation.	A flashing gas reading indicates that the gas channel is in an alarm state. In this example, the H_2S channel has equaled its low-gas alarm point of 10 ppm. If the reading was below 10 ppm and flashing, then the channel could be in a TWA or STEL alarm. Refer to *Chapter 2: Alarms*.	**Leave the area immediately!** Supervisory and Hyginene modes – Press the button to show the TWA and STEL displays. A reading that is flashing in one or both of these displays indicates the nature of the alarm. Press the button to reset the alarm. Refer to *Chapter 2: Resetting the Alarms*.

Displayed Message	Occurs . . .	Description	Action
REPLACE xxx SENSOR	At the end of "Warm-Up", during "CHECKING SENSORS"; during normal operation; at the end of sensor zero; or at the end of calibration.	The named sensor's output is not within specifications. The reading for this sensor in all corresponding displays will show "– – – –".	Clear message by pressing the Ø button. You can continue using the Bodyguard without the use of the defective sensor. Replace sensor.
REMAINING LOG TIME 1 (Accompanied by a pulsing beep)	During operation, and only when the instrument is set up for Supervisory or Hygiene operation.	Only 1 hour of data logging time remains.	Clear message by pressing the Ø button.

Displayed Message	Occurs . . .	Description	Action
LOGGING MEMORY FULL (Accompanied by a pulsing beep)	During operation, and only when instrument is set up for Supervisory or Hygiene operation.	Data-logging memory is full. No other data will be saved.	Clear message by pressing the Ø button. Download data and clear memory.
BATTERY LOW (Accompanied by a pulsing beep)	During normal operation.	Approximately 1 hour of operation remains.	Clear message by pressing the Ø button. Replace batteries or recharge pack.
BATTERY DEPLETED (Accompanied by a pulsing beep)	During normal operation.	Instrument will shut itself off in 5 seconds.	Replace batteries or recharge pack.

Displayed Message	Occurs . . .	Description	Action
O2 SENSOR NOT IN AIR	At end of SENSOR ZERO during normal operation.	Oxygen sensor does not appear to be in fresh air. Sensor will not zero, and reading will show "– – – –".	Clear message by pressing the Ø button. Re-zero sensors in fresh air.
O2 SENSOR LOW	At end of SENSOR ZERO during normal operation or as part of calibration.	Oxygen sensor output is low, but is still usable.	Clear message by pressing the Ø button. Replace Oxygen sensor as soon as possible.

Displayed Message	Occurs . . .	Description	Action
xxx SENSOR LOW	At end of calibration.	The named sensor's output is low, but is still usable.	Clear message by pressing the Ø button; then continue the calibration procedure. Replace sensor as soon as possible.
++++ (Replaces gas reading, and accompanied by a two-tone beep)	During normal operation	Overrange. Detected gas level has exceed full scale range of sensor.	**Leave the area immediately!** Acknowledge alarm by pressing the Ø button.
————	Displayed in place of gas reading.	Denotes a defective sensor.	Replace sensor.

Chapter 8: Accessories

Confined Space Kit

There are two kits of accessories for the Bodyguard that make every confined-space-entry application easy and convenient.

54-0268 – Kit #1

- Hand aspirated pump for area sampling with 10 ft. of tygon tubing.
- Waist strap that attaches to the bottom of the Bodyguard's leather case, allowing you to secure the instrument around your waist.
- Carrying case, rugged enough for even the toughest applications, protects Bodyguard and accessories on and off the job. Case contains additional room for instrument with carrying case and shoulder strap, calibration cup, charger, calibration tool, and instruction manual.

54-0269 – Kit #2

- Motorized sample draw pump, powered by two Alkaline batteries, comes with 10 ft. of tygon tubing and an assortment of filters.
- Waist strap that attaches to the bottom of the Bodyguard's leather case, allowing you to secure the instrument around your waist.

- Carrying case, rugged enough for even the toughest applications, protects Bodyguard and accessories on and off the job. Case contains additional room for instrument with carrying case, calibration cup, charger, calibration tool, and instruction manual.

Hazardous Gas Detection Kit – Value Pack

54-0270 – Combination of Bodyguard accessories for hazardous gas detection applications contained in one durable case:

- Alarm check gas for testing instrument alarm set points.
- A supply of foam filters.
- 10 inch aluminum probe.
- Lapel alarm for noisy work areas.
- Vibrating pocket alarm powered by one AAA Alkaline battery for work environments where it is extremely difficult to see and hear alarms.
- Motorized sample draw pump, powered by two Alkaline batteries, comes with 10 feet of tygon tubing and an assortment of filters.
- Waist strap conveniently secures the Bodyguard to the users belt.
- Calibration components consisting of hoses, fittings, and a 0.5 LPM regulator.
- “Unseen Menace” booklet.

- Carrying case, rugged enough for even the toughest applications, protects the Bodyguard and its accessories on and off the job. Case contains additional room for instrument with carrying case and shoulder strap, calibration cup, charger, calibration tool, and instruction manual.

Alarm Check Gas Kit

51-3002 – Single aerosol can containing 10% Oxygen, 2.5% LEL Methane, 200 ppm Carbon Monoxide, and 40 ppm Hydrogen Sulfide.

Calibration Kit

51-2979 – This kit contains hoses, fittings, and a 0.5 LPM regulator that are used to calibrate your Bodyguard.

Lapel Alarm

54-0271 – Complete with a lapel clip, this accessory plugs into the Bodyguard's Accessory Jack. This alarm will attach to most clothing and includes an audible and visual alarm ideal for alerting the user to alarm conditions in dark or noisy environments.

Pocket Alarm

51-2527 – The Pocket Alarm is recommended for extremely noisy areas and/or cold weather use. This alarm plugs into the Bodyguard's Accessory Jack and will vibrate when an alarm occurs, this providing tactile feedback of an alarm condition.

Motorized Sample Draw Pump

54-0263 (Alkaline Battery) and 54-0264 (Rechargeable Battery Pack) – This pump is easy to use, has a low-flow alarm, I.R. ON/OFF control from the Bodyguard, and a low battery alarm to ensure your safety.

Hand Aspirated Pump

54-0030 – Attaches to the Calibration Cup (54-0292) and is well suited for infrequent sampling requirements.

Waist Strap

54-0069 – Attaches to the bottom of the Bodyguard's leather case, allowing you to secure the instrument around your waist.

Battery Charger

54-0281 – Single unit 120V 50/60 Hz charger used to charge a single Bodyguard that is equipped with a Rechargeable Battery Pack.

54-0282 – 230V 50/60 Hz single-unit charger.

54-0283 – 12VDC single-unit charger.

Calibration Gas Cylinders

51-2969 – Multiple Gas: 21% O_2, 50% LEL Methane, & 250 ppm CO

51-2897 – Multiple Gas: 21% O_2, 50% LEL Methane, & 40 ppm H_2S

54-0298 – Multiple Gas: 21% O_2, 50% LEL Methane, 250 ppm CO, & 40 ppm H_2S

51-7131 – Zero Gas: 20.9% O_2

51-1121 – Methane: 50% LEL

51-2278 – CO: 250 ppm

51-1672 – H_2S: 40 ppm

51-2475 – SO_2: 10 ppm

51-2359 – NO_2: 10 ppm

51-2476 – Cl_2: 5 ppm

51-2798 – HCN: 10 ppm

Chapter 9: Bodyguard Part Number Identification

The Bodyguard's part number is determined by what sensors are installed at the time of manufacture.

For example, if your instrument's part number is 5444-1112, then it has the following sensors installed: Carbon Monoxide, Combustibles, Oxygen, and Hydrogen Sulfide. See the chart below for other part number configurations.

5444-XXXX

SENSOR LOCATION #1 – TOXIC 1

No.	Description	Part No.
0	Blank Toxic	54-0288
1	Carbon Monoxide (CO)	54-7003
2	Hydrogen Sulfide (H_2S)	54-0151
3	Chlorine (Cl_2)	54-0160
4	Ammonia (NH_3)	54-0161
5	Sulfur Dioxide (SO_2)	54-0162
6	Hydrogen Chloride (HCl)	54-0165
7	Nitric Oxide (NO)	54-0166
8	Nitrogen Dioxide (NO_2)	54-0167
9	Hydrogen Cyanide (HCN)	54-0168

SENSOR LOCATION #4 – TOXIC 2

No.	Description	Part No.
0	Blank Toxic	54-0288
1	Carbon Monoxide (CO)	54-7003
2	Hydrogen Sulfide (H_2S)	54-0151
3	Chlorine (Cl_2)	54-0160
4	Ammonia (NH_3)	54-0161
5	Sulfur Dioxide (SO_2)	54-0162
6	Hydrogen Chloride (HCl)	54-0165
7	Nitric Oxide (NO)	54-0166
8	Nitrogen Dioxide (NO_2)	54-0167
9	Hydrogen Cyanide (HCN)	54-0168

SENSOR LOCATION #2

No.	Description	Part No.
0	Blank Combustible	54-0291
1	Combustible/LEL	54-0175

SENSOR LOCATION #3

No.	Description	Part No.
0	Blank Oxygen	54-0288
1	Oxygen (O_2)	54-7001

Chapter 10: Replacement Parts

Description	Part Number
Sensor Gasket:	
Foam Tape Adhesive	54-0239
Filter Paper	54-0240
Foam Sensor Gasket	54-0238
Gasket (order by the foot)	
Back Case	05-4808
Top Cover	05-4809
Rechargeable Battery Pack	54-0235
Lithium Battery	204-0022

Sensors:

Ammonia (NH_3)	54-0161
Carbon Monoxide (CO)	54-7003
Chlorine (Cl_2)	54-0160
Combustibles	54-0175
Hydrogen Chloride (HCl)	54-0165
Hydrogen Cyanide (HCN)	54-0168
Hydrogen Sulfide (H_2S)	54-0151
Nitric Oxide (NO)	54-0166
Nitrogen Dioxide (NO_2)	54-0167
Oxygen (O_2)	54-7001
Sulfur Dioxide (SO_2)	54-0162

Chapter 11: Service Centers

United States

625 Alpha Drive
Pittsburgh, PA 15238
Phone: (412) 963-2214
FAX: (412) 963-2606

8618 Louisiana Place
Merrillville, IN 46410
Phone: (219) 736-6178
FAX: (219) 736-6269

5151 Mitchelldale, B-4
Houston, TX 77092
Phone: (713) 683-8141
FAX: (713) 683-9437

7300 Industrial Park
Rt. 130, Bldg. 22
Pennsauken, NJ 08110
Phone: (609) 665-6176
FAX: (609) 665-6661

7281 Garden Grove Blvd.,
Suite H
Garden Grove, CA 92841
Phone: (714) 895-0050
FAX: (714) 895-7950

Canada

Bacharach of Canada, Inc.
181 Bentley Street, Unit #5
Markham, Ontario
L3R 3Y1 Canada
Phone: (905) 470-8985
FAX: (905) 470-8963

Denmark

Bacharach, Inc. International
P.O. Box 44
58 Kongensgade
DK 6070 Christiansfeld
Denmark
Phone: (45)(74) 563171
FAX: (45)(74) 563178

Warranty

Bacharach, Inc. warrants to Buyer that at the time of delivery this Product will be free from defects in material and manufacture and will conform substantially to the published specifications. Bacharach's liability and Buyer's remedy under this warranty are limited to the repair or replacement, at Bacharach's option, of this Product or parts thereof returned to Seller at the factory of manufacture and shown to Bacharach Inc.'s reasonable satisfaction to have been defective; provided that written notice of the defect shall have been given by Buyer to Bacharach Inc. within one (1) year after the date of delivery of this Product by Bacharach, Inc.

BACHARACH®
625 Alpha Drive, Pittsburgh, PA 15238-2878
1-800-736-4666